Detector (SiD/ILD) specifications

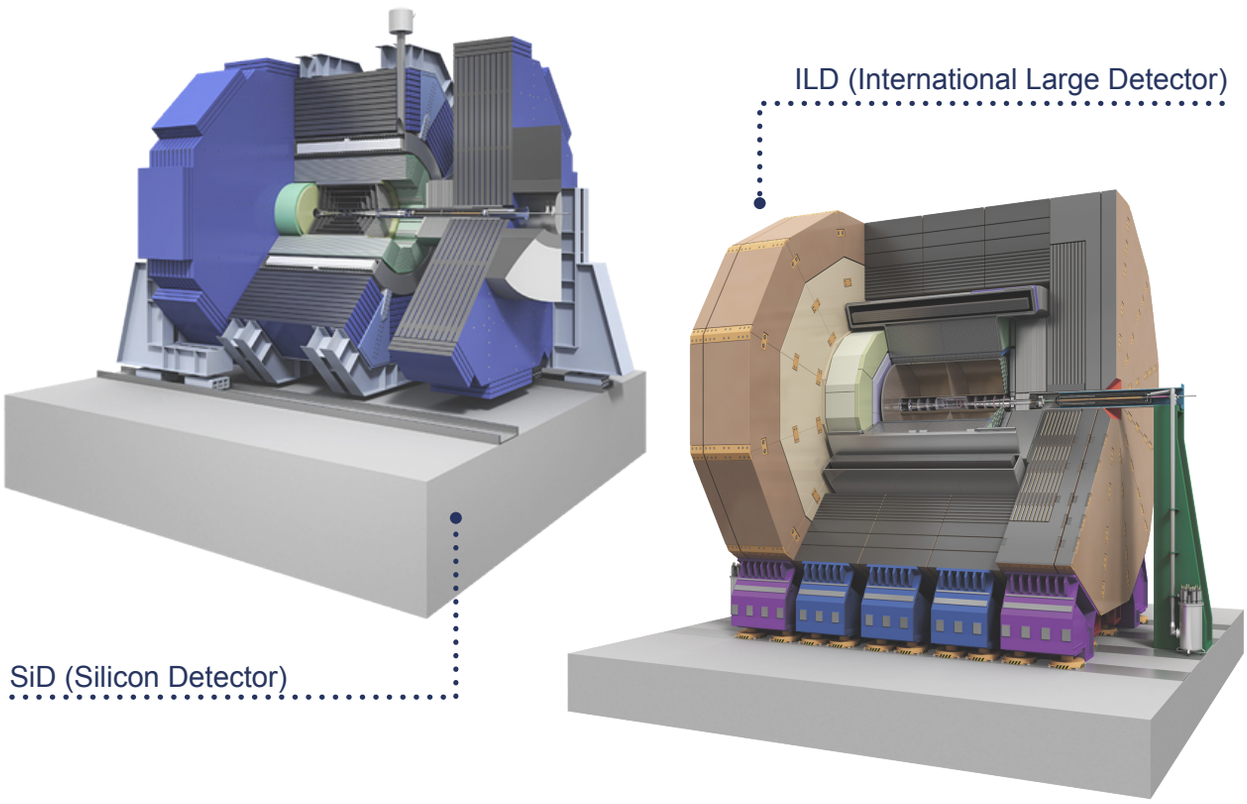

Experimental hall	Hall size	25 m x 142 m x 42 m (height)
Detectors	The ILD detector in detail	
	Height	~ 16 m
	Length	~ 14 m
	Weight	~ 14,000 tonnes
	Superconducting solenoid	3.5 teslas
	Vertex detector spatial resolution	3 μm
	Central tracker (TPC) spatial resolution	60 μm (220 layers)
	The SiD detector in detail	
	Height	~ 14 m
	Length	~ 11 m
	Weight	~ 10,100 tonnes
	Superconducting solenoid	5 teslas
	Vertex detector spatial resolution	< 5 μm
	Central semiconductor tracker spatial resolution	8 μm (5 layers)